SHADE-SOFT-CLAM

Suspended Acoustic Lampshade - LED / Bulb



LIGHT SOURCE	LED, E26 Socket (1xA19 not included), No Light Source (NLS)
LUMENS (LED ONLY)	1700, 2500, 3000, 3500, 4000, 4500, 5000
CCT (LED ONLY)	2700K, 3000K, 3500K, 4000K
CRI (LED ONLY)	90+
DIMMING & CONTROLS (LED ONLY)	0-10V Flicker Free 1% Dimming Standard (DIM10), Triac Dimming (DIMTR)

EMERGENCY (REMOTE / LED ONLY)	10W - Up to 1000L Output (Bodine BSL310) 20W - Up to 2000L Output (Bodine BSL20)
OPTICS (LED ONLY)	NSPD (15º), SPD (24º), MD (36º), MWD (50º)
COLOR QUALITY (LED ONLY)	2 Step MacAdam Ellipse
CORD / CANOPY COLOR	WH (White), BK (Black)
MATERIAL COLORS	Refer to SoftSense T-Material Color Chart

"Shade" are acoustic pendant or suspended fixtures that can be ordered with an LED light source or an E26 socket to fit an A19 bulb. These aesthetically pleasing lampshades allow you to adjust the reverberation rate and brightness of your space. Hang them around open-concept areas to minimize distractions, increase focus, and bring a peace for everyone.

The "Clam" - Inspired by the layered form of a seashell, Clam features overlapping acoustic panels that curve gently around the luminaire. Its soft, organic silhouette creates a sense of depth and dimension, while the layered construction adds visual texture. Both sculptural and functional, Clam brings natural character and sound absorption to the space.

MOQ REQUIRED

ASTM-E84

c UL us LISTED

5 YEARS LIMITED WARRANTY

CERTIFIED RECYCLED CONTENT

11.17.26

Due to changes of constant improvement in technology and methods, all details are subject to change without notice. Consult factory for up to date information.

SHADE-SOFT-CLAM
Suspended Acoustic Lampshade - LED / Bulb

Example: **SHADE-SOFT-CLAM-1750L-DIM10-MVOLT-SPD-35K-90-BK-BK-T-GRN**

SHADE-SOFT												
SERIES	STYLE	LUMENS	DRIVER	VOLTAGE	OPTICS	CCT	CRI	EMERGENCY*	CANOPY[1]	CORD[1]	COLOR
SHADE-SOFT SoftSense Suspended Lampshade	**CLAM** - Clam [1] *MOQ - minimum order quantity required !*	**1750L** - 1750 Lumens **2500L** - 2500 Lumens **3000L** - 3000 Lumens **3500L** - 3500 Lumens **4000L** - 4000 Lumens **4500L** - 4500 Lumens **5000L** - 5000 Lumens **E26**[2] - E26 Socket for Bulb **NLS**[2] - no light source	**DIM10** - 0-10V Dimming **DIMTR**[3] - Triac Dimming	**MVOLT** - 120-277Vac **120** - 120 Volt	**NSPD** - 15 degrees **SPD** - 24 degrees **MD** - 36 degrees **MWD** - 50 degrees	**27K** - 2700K **30K** - 3000K **35K** - 3500K **40K** - 4000K	**90**	**0-EMG-LED-10W** **0-EMG-LED-20W**	**WH** - White **BK** - Black	**WH** - White **BK** - Black	reference SoftSense (**thermoformed**) t-material color chart example: **T-GRN** - Green

[1] Consult factory for custom color
[2] please skip to frame finish
[3] DIMTR available in 120V only
* remote mount only

DIMENSIONS

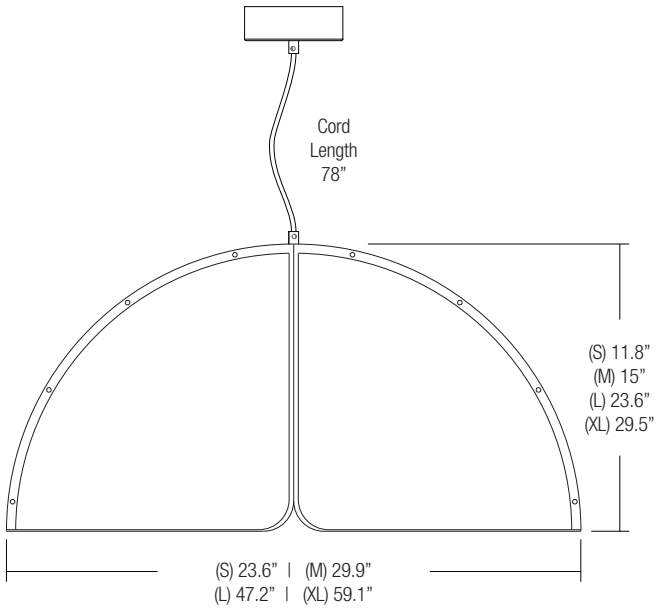

ACOUSTIC MATERIAL
Made from 100% polyethylene terephthalate (PET), with 50% post-consumer recycled material. PET is a moisture resistant green product with no added chemicals, binders, adhesives or dyes. While made from the same materials as our acoustic panels, this product features a thinner acoustic that has been thermoformed into shape, resulting in a firmer, more rigid texture.

WELL FOR SOUND
This luminaire is recommended for use as an acoustical absorption surface to limit reverberation times (RT) in a given space. This luminaire contributes to noise reduction and vibration dampening to promote focus and concentration. Reverberation needs to be calculated in each space based on the materials used.

PRODUCT SPECIFICS *(exact size in mm)*
Small - diameter: 23.6” (600), height: 11.8” (300)
Medium - diameter: 29.9” (760), height: 15” (380)
Large - diameter: 47.2” (1200), height: 23.6” (600)
X-Large - diameter: 59.1” (1500), height: 29.5” (750)

MAINTENANCE / CARE
Acoustic material can be cleaned with a clean, soft, lint-free cloth or a vacuum.

WARRANTY
Limited 5-year Warranty. (Labor not included.) Please consult factory.

LISTINGS
ASTM E-84 Fire Rated (acoustic only)
SCS Recycled Content Certified (acoustic only)
BAA - Buy American Act Compliant government procurement requirements under FAR, DFARS and DOT regulations.

11.17.26

Due to the changes of constant improvement in LED technology, all details are subject to change without notice. Consult factory for up to date information.

SHADE-SOFT-CLAM

Suspended Acoustic Lampshade - LED / Bulb

NO LIGHT SOURCE

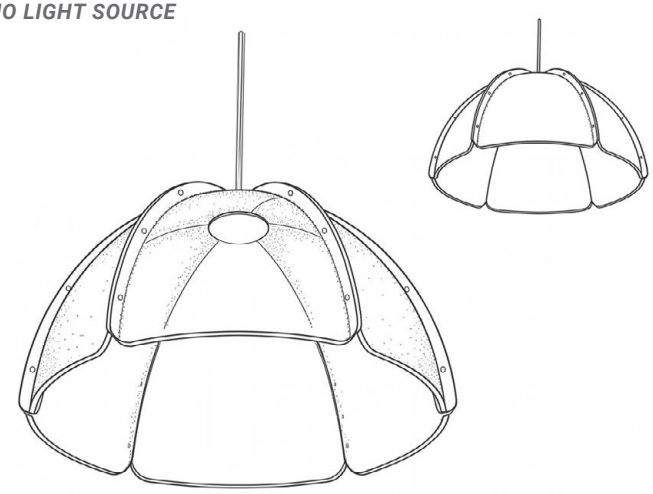

similar lampshade shape shown as reference

RETROFIT LIGHTING *- fits any standard E26 Bulb. (Bulb not included.)*

1 x A19/Medium (E26)/100W/120V Incandescent
1 x A19/Medium (E26)/120V LED

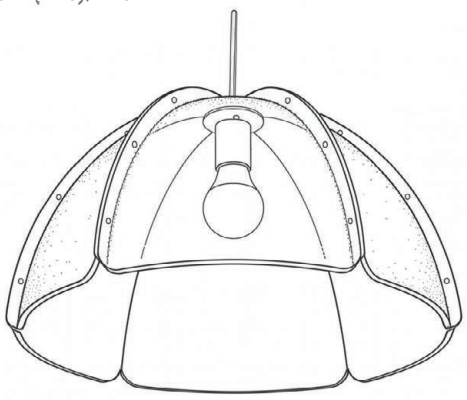

similar lampshade shape shown as reference

LED LIGHT SOURCE

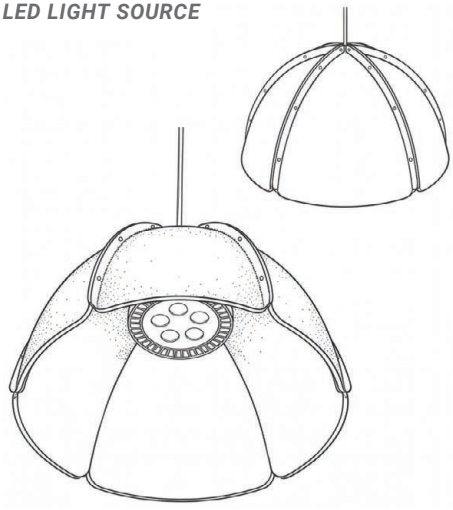

similar lampshade shape shown as reference

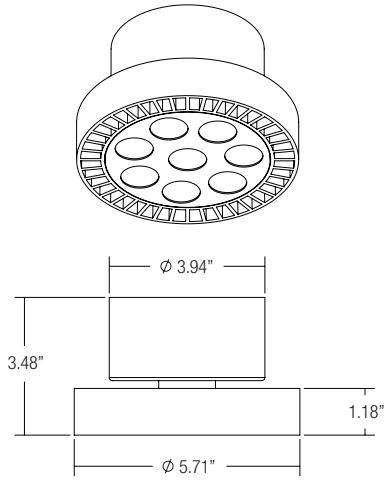

LUMENS	WATTS
5000	38
4500	34
4000	30
3500	26.5
3000	22.5
2500	19
1750	13.5

Based on 3000K, 90+ CRI.
Actual wattage may vary +/- 5%

11.17.26

Due to the changes of constant improvement in LED technology, all details are subject to change without notice. Consult factory for up to date information.

SOFTSENSE T-MATERIAL COLOR CHART

Thermoformed Panel Thickness: 6 mm / 0.35" (+/- 0.25 mm)

All panels ASTM E84-16 Fire Rated

COBBLESTONE T-CBS	MATCHA T-MCH	PALE T-PAL	SALMON T-SMN
GRAYSTONE T-GRS	GREEN T-GRN	EGGNOGG T-NOG	MAGENTA T-MAG
SHADOW T-SHD	RACING GREEN T-BRG	DIJON T-DIJ	PASSION T-PAS
ABYSS T-ABS	ARMY T-ARM	COPPER T-CPR	TERRACOTTA T-TCT
IRON T-IRO	BASIL T-BSL	LATTE T-LTE	RUST T-RST
NIGHT T-NIT	TEAL T-TEL	MOCHA T-MOC	
INDIGO T-IND	CYAN T-CYA	PECAN T-PEC	
AZURE T-AZU	BABY BLUE T-BBB	MERLOT T-MER	

Declare.
Label Pending

colors with the same name from this rigid felt material will not be a perfect match to our standard panel colors
***all colors are ASTM E84-16 fire rated**

11.17.26

Due to the changes of constant improvement in LED technology, all details are subject to change without notice. Consult factory for up to date information.