ORACLE LIGHTING
By Elite Lighting

22-OVHP-RTK-LED
2′ x 2′ LED Retrofit Kit

2'x2'

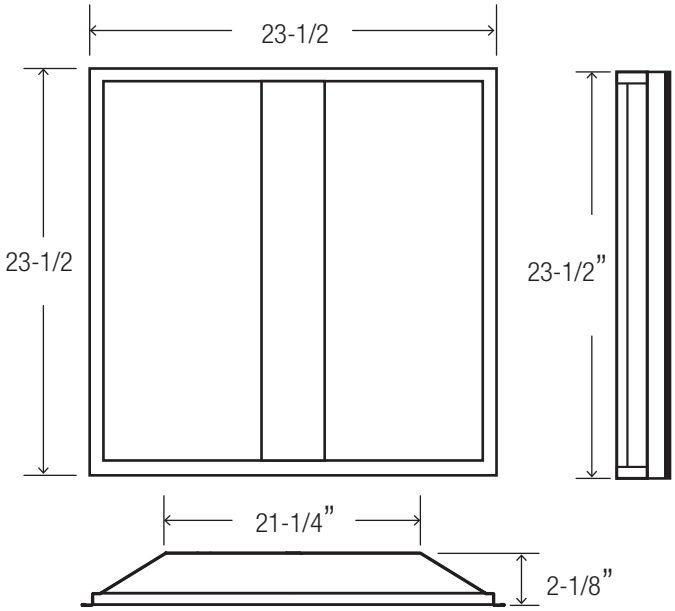

NOMINAL LUMENS	WATTAGE
4000	30 W
3200	22.9 W
2000	17 W

Based on 4000K, 85+ CRI. Actual wattage may vary +/- 5%

FEATURES

LED Troffer Retrofit Kit makes it easy to replace fluorescent troffers with energy-efficient LED lights. The OVHP-RTK is the first LED troffer retrofit to completely assemble in approximately under five minutes. Fast installation and fixture design allow for installation into existing fixture housing with 3-1/8" depth or greater. Spaces are filled with brighter, softer volumetric illumination that creates a more comfortable, productive environment. Energy-efficiency and advanced optics create the ideal choice for indoor illumination used in offices, hallways, conference rooms, warehouses, gymnasiums, retail, hospitality, commercial, and medical applications.

LUMENS	2000, 3200, 4000
CCT & DYNAMIC PLATFORMS	30K, 35K, 40K, 50K
CRI	85+
COLOR QUALITY	3 Step MacAdam Ellipse
SIZE	2'x2', 2'x4', 1'x4'
MOUNTING	Recessed
DIMMING & CONTROL	0-10V Flicker Free 1% Dimming Standard (DIM10), LUTH, LUTFTB, LUT2W, DIMST, ELDO10.1, ELDODMX.1, DALI.1
EMERGENCY	10W - Up to 1000L output (Bodine BSL310) 20W - Up to 2000L output (Bodine BSL20)
LIFETIME	L70 at 50,000 Hours
PHOTOMETRIC TESTS	In Accordance with IES LM79-08, LM80 and TM-30, TM-21

DLC QPL LISTED PREMIUM
c UL us LISTED
PROUDLY ASSEMBLED in AMERICA
QUICKSHIP CONSULT FACTORY
5 YEARS LIMITED WARRANTY

Due to the changes of constant improvement in LED technology, all details are subject to change without notice. Consult factory for up to date information.

MAINTENANCE
The center acrylic diffuser can be removed, allowing easy access to LED boards and driver compartment, locking into place for secure closure of the luminaire. LED engines and driver are removable and upgradable even after luminaire installation. Smooth corners ensure safe handling and quick installation. Luminaire can be regularly and safely wiped down to ensure optimal performance.

OPTICAL SYSTEM
LED light engines are attached directly to the housing and keep LED engines cool. An advanced thermal management system allows the light output of the LED engines to be maintained at 80% of initial lumens at 60,000 hours of operation. Frosted acrylic lens gathers light scattered by the LED chips and delivers highly efficient volumetric lighting, eliminating unwanted shadows and surface glare.

CONSTRUCTION
Housing made from 20-gauge cold rolled steel and a polycarbonate diffuser that helps with heat management and provides uniform illumination.

FINISH
Post-painted with a 93% reflective white coat to improve luminaire efficacy, with all body components seamlessly interlocked for added structural strength.

MOUNTING
Compatible with surface mounting and for fixtures with recessed with recessed housings of 3-1/8" depth or greater.

Fast, Simple Installation

1.Open the diffuser door and remove all florescent tubes from the fixture.
2.Remove the cover and all other internal components. Disconnect fluorescent ballast from power wires.
3.Install brackets by using the 2 hanger bars provided. These hangers will slide in parallel from each other.
4.Secure the fixture on the hanger bars with self-tapping screws. Once fixture is secure, attach the aircraft cable to the frame of the housing.
5.Once all of the wires are connected and the aircraft cable is secure, tuck in all of the wires and cables before closing the LED retrofit. The LED retrofit light will have to lock in tabs. Secure these tabs by pushing them inward.

OPTIONS
Fixtures can be shipped pre-installed with daylight harvesting controls, occupancy sensors, and/or power pack. Available manufacturer options include Leviton, Wattstopper, Hubble Automation, and others.

DRIVER ELECTRICAL INFORMATION
Powered by high-quality constant-current power LED drivers which are rated for 50 to 60Hz at 120/277V input. Available in 347V., produce less than 20% THD, and have a power factor of .90 to 1.00.

DIMMING & DRIVER INFORMATION
DIM10 - Flicker Free 1% Dimming Standard (DIM10) 0-10V dimming on either MVOLT 120, 277 or 347V.
LUT2W - Lutron LTEA2W Hi-Lume 1%. 2-wire LED Driver Forward Phase Control, 1% dimming in 120V only. Available on all luminaires up to 40 watts.
LUTH - Lutron LDE1 Hi-Lume Eco System. 1% dimming with Soft in Fade to Black dimming technology.
ELDO10.1 - EldoLED SoloDrive 0-10V. Dimming down to 0.1%.
DALI - DALI DT6, DT8 dimming down to 1%.
ELDODMX - EldoLED PowerDrive dimming down to 0.1%.
Please see EldoLED website for wiring diagrams and a list of compatible DMX and DALI control systems.
DIMST - Step Dimming

WARRANTY
Five-year warranty for parts and components. (Labor not included)

LISTINGS
c-UL-us - Listed for Feed Through Wiring.
Listed for DLC.

Example: **22-OVHP-RTK-LED-3200L-DEXAL-MVOLT-30K-85**

22	OVHP-RTK	LED								
FIXTURE SIZE	SERIES	TYPE	LUMENS	DIMMING	VOLTAGE	CCT	CRI	EMERGENCY	OTHER OPTIONS
22 - 2' X2'	**OVHP-RTK** - LED Retrofit Kit	**LED**	**2000L** - 2000 lumens **3200L** - 3200 lumens **4000L** - 4000 lumens	**DIM10** - 0-10V Dimming **DIMST** - Step Dimming **LUTH** - Lutron Hilume **LUT2W** - Lutron 2Wire **LUTFTB** - Lutron Fade to Black **ELDO10.1** - EldoLED 0-10V **ELDODALI** - EldoLED DALI **ELDODMX** - EldoLED DMX **DEXAL** - OSRAM Dexal Dimming	**MVOLT** **347*** *Consult factory for details	**30K** **35K** **40K** **50K**	**85**	**O-EMG-LED-10W** **O-EMG-LED-20W**	**FBF** - Internal Fast Blow Fuse **SBF** - Internal Slow Blow Fuse **USA** - Made in America Compliance **DFCSJ-OEM-RF** - Clear Connect (RF) only **DFCSJ-OEM-OCC** - Clear Connect (RF) and Occupancy/ Daylight Sensing

LUT2W are available in 120V only **LUT2W** up to 5000L
LUTH, **ELDO10-.1**, **ELDODALI-.1**, and **ELDODMX-.1** are available in 120V and 277V
-**Reference last page for Control Options**

Due to the changes of constant improvement in LED technology, all details are subject to change without notice. Consult factory for up to date information.

22-OVHP-RTK-LED-2000L-DIMST-MVOLT-40K-85

TEST NO.: **EL111707**

INPUT WATTS: **17.1** LUMENS: **2040** CRI: **85** EFFICACY: **119** CCT: **4000K**

Candle Power Distribution (Candelas)

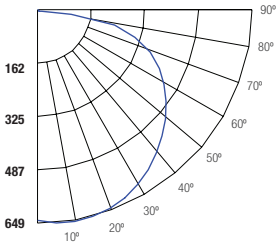

Zonal Lumens Summary

Zone	Lumens	%Lamp	%Fixt
0-30°	494.52	24.30	24.20
0-40°	811.31	39.80	39.80
0-60°	1460.22	71.70	71.60
0-90°	2017.67	99.00	98.90
0-180°	2039.51	100.10	100.00

Luminance Data (cd/sq.m)

Angle In Degrees	Average 0°	Average 45°	Average 90°
45°	2039	1821	1490
55°	2241	1873	1391
65°	2607	2070	1271
75°	3197	2610	1102
85°	3166	3759	948

Candela Tabulation

	0	45	90
0	636.209	636.209	636.209
5	647.670	642.220	634.170
15	646.220	634.680	607.910
25	626.580	600.780	553.860
35	588.370	548.400	479.650
45	536.240	478.990	391.970
55	478.080	399.670	296.870
65	409.850	325.340	199.810
75	307.740	251.240	106.100
85	102.640	121.850	30.720
90	10.950	23.430	4.720

Spacing Criteria

0-180	:	**1.42**
90-270	:	**1.22**
Diagonal	:	**1.40**

EFFICACY: **119 LM/W**

Coefficients of Utilization - Zonal Cavity Method
Effective Floor Cavity Reflectance 20% = PF

RC	80%				70%				50%			30%			10%		0%
RW	70%	50%	30%	10%	70%	50%	30%	10%	50%	30%	10%	50%	30%	10%	50%	30%	10%	0%
0	119	119	119	119	116	116	116	116	111	111	111	106	106	106	101	101	101	99
1	107	102	97	92	104	99	95	91	95	91	88	90	87	85	87	84	82	80
2	97	87	80	74	94	85	79	73	82	76	71	78	73	69	75	71	67	65
3	88	76	67	60	85	75	66	60	71	64	59	68	62	57	66	61	56	54
4	80	67	58	51	77	66	57	50	63	55	49	61	54	49	58	52	48	45
5	73	60	50	43	71	59	50	43	56	48	42	54	47	42	52	46	41	39
6	68	54	44	38	66	53	44	37	51	43	37	49	42	37	47	41	36	34
7	63	49	40	33	61	48	39	33	46	38	33	45	38	32	43	37	32	30
8	58	44	36	29	57	44	35	29	42	35	29	41	34	29	40	33	29	27
9	54	41	32	26	53	40	32	26	39	31	26	38	31	26	36	30	26	24
10	51	37	29	24	50	37	29	24	36	29	24	35	28	24	34	28	23	22

ROOM CAVITY RATIO

RC - Ceiling Cavity Reflectance RW - Wall Reflectance

22-OVHP-RTK-LED-3200L-DEXAL-MVOLT-40K-85

TEST NO.: **EL111707**

INPUT WATTS: **22.9** LUMENS: **3200** CRI: **85** EFFICACY: **140** CCT: **4000K**

Candle Power Distribution (Candelas)

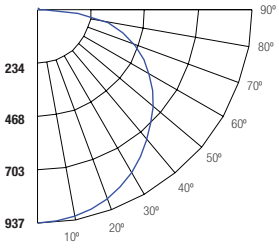

Zonal Lumens Summary

Zone	Lumens	%Lamp	%Fixt
0-30°	724.22	24.10	24.10
0-40°	1188.31	39.60	39.60
0-60°	2145.69	71.50	71.40
0-90°	2971.59	99.00	98.90
0-180°	3003.84	100.10	100.00

Luminance Data (cd/sq.m)

Angle In Degrees	Average 0°	Average 45°	Average 90°
45°	2163	2378	2668
55°	2018	2378	2883
65°	1861	2529	3267
75°	1603	2998	4031
85°	1300	3846	5461

Candela Tabulation

	0	45	90
0	932.115	932.115	932.115
5	928.018	928.018	927.180
15	886.057	896.463	902.841
25	807.086	833.846	855.479
35	697.552	738.797	785.392
45	568.990	625.467	701.640
55	430.437	507.387	614.984
65	292.491	397.630	513.512
75	154.361	288.633	388.100
85	42.152	124.681	177.047
90	5.764	12.350	33.207

Spacing Criteria

0-180	:	**1.22**
90-270	:	**1.32**
Diagonal	:	**1.40**

EFFICACY: **140 LM/W**

Coefficients of Utilization - Zonal Cavity Method
Effective Floor Cavity Reflectance 20% = PF

RC	80%				70%				50%			30%			10%		0%
RW	70%	50%	30%	10%	70%	50%	30%	10%	50%	30%	10%	50%	30%	10%	50%	30%	10%	0%
0	119	119	119	119	116	116	116	116	111	111	111	106	106	106	101	101	101	99
1	107	101	97	92	104	99	95	91	95	91	87	90	87	85	87	84	82	80
2	96	87	80	74	94	85	78	73	82	76	71	78	73	69	75	71	67	65
3	88	76	67	60	85	74	66	60	71	64	58	68	62	57	65	60	56	54
4	80	67	58	51	77	66	57	50	63	55	49	60	54	48	58	52	48	45
5	73	60	50	43	71	59	50	43	56	48	42	54	47	42	52	46	41	39
6	68	54	44	38	66	53	44	37	51	43	37	49	42	36	47	41	36	34
7	63	49	39	33	61	48	39	33	46	38	33	44	37	32	43	37	32	30
8	58	44	35	29	57	43	35	29	42	34	29	41	34	29	39	33	28	26
9	54	41	32	26	53	40	32	26	39	31	26	37	31	26	36	30	26	24
10	51	37	29	24	50	37	29	24	36	29	24	35	28	23	34	28	23	21

ROOM CAVITY RATIO

RC - Ceiling Cavity Reflectance RW - Wall Reflectance

22-OVHP-RTK-LED-4000L-DIMST-MVOLT-40K-85

TEST NO.: **EL111706**

INPUT WATTS: **30.8** LUMENS: **3909** CRI: **85** EFFICACY: **127** CCT: **4000K**

Candle Power Distribution (Candelas)

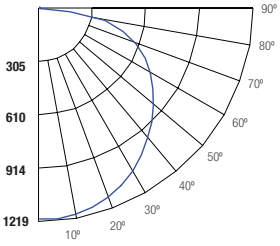

Zonal Lumens Summary

Zone	Lumens	%Lamp	%Fixt
0-30°	942.39	24.10	24.10
0-40°	1546.28	39.60	39.60
0-60°	2792.05	71.50	71.40
0-90°	3866.74	99.00	98.90
0-180°	3908.71	100.10	100.00

Luminance Data (cd/sq.m)

Angle In Degrees	Average 0°	Average 45°	Average 90°
45°	3513	3162	2815
55°	3779	3182	2625
65°	4323	3425	2421
75°	5243	4184	2086
85°	5548	5830	1692

Candela Tabulation

	0	45	90
0	1213.264	1213.264	1213.264
5	1219.170	1214.130	1207.570
15	1186.160	1180.470	1152.970
25	1124.930	1093.640	1050.210
35	1032.250	975.820	907.680
45	923.900	831.760	740.390
55	806.250	678.800	560.100
65	679.580	538.430	380.600
75	504.730	402.820	200.860
85	179.850	188.990	54.850
90	17.370	33.360	7.500

Spacing Criteria

0-180	:	**1.34**
90-270	:	**1.22**
Diagonal	:	**1.40**

EFFICACY: **127 LM/W**

Coefficients of Utilization - Zonal Cavity Method
Effective Floor Cavity Reflectance 20% = PF

RC	80%				70%				50%			30%			10%		0%
RW	70%	50%	30%	10%	70%	50%	30%	10%	50%	30%	10%	50%	30%	10%	50%	30%	10%	0%
0	119	119	119	119	116	116	116	116	111	111	111	106	106	106	101	101	101	99
1	107	101	97	92	104	99	95	91	95	91	87	90	87	85	87	84	82	80
2	96	87	80	74	94	85	78	73	82	76	71	78	73	69	75	71	67	65
3	88	76	67	60	85	74	66	60	71	64	58	68	62	57	65	60	56	54
4	80	67	58	51	77	66	57	50	63	55	49	60	54	48	58	52	48	45
5	73	60	50	43	71	59	50	43	56	48	42	54	47	42	52	46	41	39
6	68	54	44	38	66	53	44	37	51	43	37	49	42	36	47	41	36	34
7	63	49	39	33	61	48	39	33	46	38	33	44	37	32	43	37	32	30
8	58	44	35	29	57	43	35	29	42	34	29	41	34	29	39	33	28	26
9	54	41	32	26	53	40	32	26	39	31	26	37	31	26	36	30	26	24
10	51	37	29	24	50	37	29	24	36	29	24	35	28	23	34	28	23	21

ROOM CAVITY RATIO

RC - Ceiling Cavity Reflectance RW - Wall Reflectance

Due to the changes of constant improvement in LED technology, all details are subject to change without notice. Consult factory for up to date information.