ORACLE LIGHTING
By Elite Lighting

Dims to Warm

22-LITE-LED-5

2'X2' Architectural Fully Illuminated Recessed LED Troffer

2'x2'

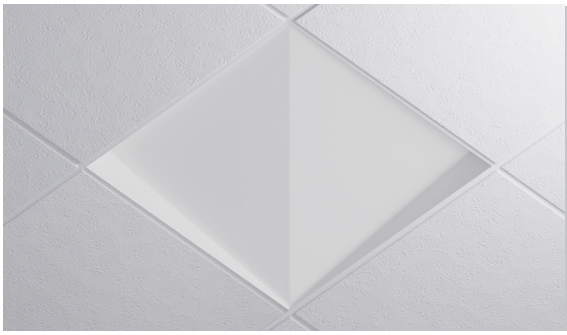

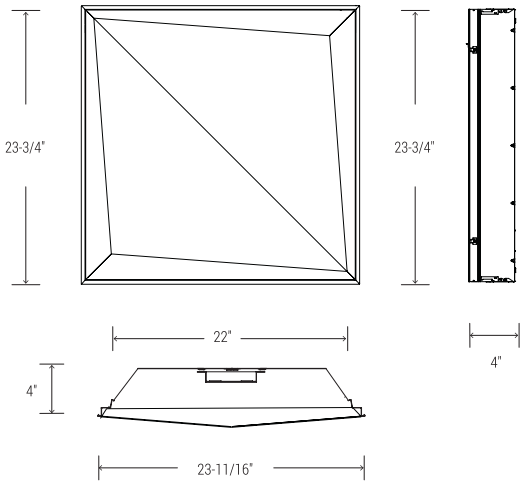

NOMINAL LUMENS	WATTAGE
3000	38 W
2000	25 W

Based on 4000K, 85+ CRI. Actual wattage may vary +/- 5%

DYNAMIC PLATFORM

SMART DIM - Dims to Warm with Smart Dim Technology simulates traditional incandescent halogen lighting through dimming, while providing the energy efficiency, high performance and longevity of LED luminaires. When the luminaire dims to warm, it makes a smooth transition across the black body radiator curve. Starting with a 100% lumen output at 3000K, down to a 1% lumen output at 1800K, and maintaining a constant CRI of 90+. It results in rich amber tones as the light dims, encouraging relaxation. An ideal source for hospitality, healthcare, restaurants, and assisted living applications.

LUMENS	2000, 3000
WARM DIM PLATFORMS	100% lumen output at 3000K, down to a 1% lumen output at 1800K
CRI	90+
COLOR QUALITY	2 Step MacAdam Ellipse
SIZE	2'x2', 2'x4'
MOUNTING	Recessed
DIMMING & CONTROL	0-10V Flicker Free 1% Dimming Standard (DIM10), LUTH, LUT2W, DIMST, ELDO10.1, ELDODMX.1, DALI.1
EMERGENCY	10W - Up to 1000L output (Bodine BSL310) 20W - Up to 2000L output (Bodine BSL20)
LIFETIME	L70 at 50,000 Hours
PHOTOMETRIC TESTS	In Accordance with IES LM79-08, LM80 and TM-30, TM-21

c UL us LISTED

PROUDLY ASSEMBLED in AMERICA

QUICKSHIP CONSULT FACTORY

5 YEARS LIMITED WARRANTY

Due to the changes of constant improvement in LED technology, all details are subject to change without notice. Consult factory for up to date information.

ORACLE LIGHTING
By Elite Lighting

Dims to Warm

22-LITE-LED-5

2'X2' Architectural Fully Illuminated Recessed LED Troffer

2'x2'

FEATURES
Resembling a subtle fold in a sheet of paper, the lens creates a unique appearance that brings interest to any space, maintaining a soft, uniform glow across the surface. With a unique look of form and function, it can be grouped together in various patterns, giving any space a playful take on the visual experience, enhancing inspiration to create endless configurations. Allow its versatility to inspire you to optimize the design for corporate offices, educational, health care, and retail applications.

OPTICAL SYSTEM
The LED light engine is secured to the body of the luminaire, with the body acting as a heat sink. A proprietary design of the lens results in zero pixilation, regardless of the viewing angle, with LEDs placed to promote a uniform appearance. The result is even illumination across the space, from luminaire to luminaire.

MAINTENANCE
The door frame assembly is hinged, allowing easy access to LED boards and driver compartment, locking into place for secure closure of the luminaire. LED engines and drivers are removable and upgradable even after luminaire installation. Luminaire can be regularly and safely wiped down to ensure optimal performance.

OPTICAL SYSTEM
The LED light engine is secured to the body of the luminaire, with the body acting as a heat sink. A proprietary design of the lens results in zero pixilation, regardless of the viewing angle, with LEDs placed to promote a uniform appearance. The result is even illumination across the space, from luminaire to luminaire.

CONSTRUCTION
Body is constructed of heavy-duty 20-gauge cold rolled steel, post-painted and engineered for maximum strength and extended life. All corners interlock to prevent aesthetic damage to the luminaire, with sides and corners uniformly turned in and hemmed to remove sharp edges for safe handling and easy installation. Luminaire is supplied with multiple wiring entrances for easy daisy chain of luminaires, to add power packs, whips, or other accessories in the field, or for continuous row mounting.

FINISH
Post-painted with a 93% reflective white coat to improve luminaire efficacy, and all body components are seamlessly interlocked for added structural strength.

MOUNTING
Luminaires accommodate lay-in ceilings, Slot T, and T-bar suspension systems for 5/8" and 3/8" ceiling thicknesses. Four corner tie points are standard for safety wire support when required, with built-in earthquake clips, standard. Luminaires may be available with flange kits, surface mounted kits, and other options.

OPTIONS
Luminaires can be shipped pre-installed with whips, modular wiring systems, daylight harvesting controls, occupancy sensors, and/or power packs for individual or room control solutions.

DRIVER ELECTRICAL INFORMATION
Powered by high-quality constant-current power LED drivers which are rated for 50 to 60Hz at 120-277V input, produce less than 20% THD, and have a power factor of .90 to 1.00.

WARRANTY
Five-year warranty for parts and components. (Labor not included)

LISTINGS
c-UL-us - Listed for Feed Through Wiring.

Example: **22-LITE-LED-5-WDM-35K-18K-3000L-DIM10-MVOLT-90**

22	LITE-LED-5	WDM						
FIXTURE SIZE	SERIES	TECHNOLOGY	LUMENS	DIMMING	VOLTAGE	CRI	EMERGENCY	OTHER OPTIONS
22 - 2' X2'	**LITE-LED-5** - Fully Illuminated LED Troffer	**WDM-35K-18K**	**2000L** - 2000 lumens **3000L** - 3000 lumens	**DIM10** - 0-10V Dimming **DIMST** - Step Dimming **LUTH** - Lutron Hilume **LUT2W** - Lutron 2Wire **ELDO10.1** - EldoLED 0-10V **DALI.1** - EldoLED DALI **ELDODMX.1** - EldoLED DMX	**120** **277** **MVOLT**	**90+**	**EMG-LED-10W** **EMG-LED-20W**	**22FK** - 2'x2' Flange Kit **FBF** - Internal Fast Blow Fuse **SBF** - Internal Slow Blow Fuse **RIS** - Radio Interference Suppressor **USA** - Made in America Compliance

LUT2W are available in 120V only **LUT2W** up to 4000L
LUTH, **ELDO10-.1**, **ELDODALI-.1**, and **ELDODMX-.1** are available in 120V and 277V
-**Reference last page for Control Options**

Due to the changes of constant improvement in LED technology, all details are subject to change without notice. Consult factory for up to date information.

1- Luminaire will be shipped with Powerpacks pre-installed, ready to be integrated to designated contol systems
2- Luminaire will be shipped with Sensors installed on the luminaire, allowing for individual luminaire control. Luminaires will be ready to be integrated with designated control systems
3- Luminaire will be shipped with Sensors to be remotely installed on the ceiling. Luminaires will be ready to be integrated with designated control systems

BRAND	EASYFIT by EnOcean	LUTRON	enlighted	LEVITON	OSRAM	PHILIPS EasySense	legrand
CONTROL UNIT	❏ LEDRU LED Relay Zone Controller 0-10V [1]	❏ FCJS-0-10 Lutron Vive 0-10V Individual Control Models [1 4]	❏ CU-4E-FMH Fixture Mount Control Unit [1 5]	❏ ZL027 –N0W Intellect Power Control Module [1 6]	❏ EN-WCM2-ZB-DR Wireless Control Module [1 7]	❏ XITANIUM SR LED DRIVER The Philips Advance Xitanium SR LED driver [1 8]	❏ LMFC-011 ON/OFF/0-10V dimming fixture controller [1 9]
	❏ LEDDU LED Zone Controller 0-10V [1]	❏ FCJS-ECO Lutron Vive Eco-system Individual Control Models [1 4]		❏ ZL027 –DLE Intellect Power Control Module [1 6]	❏ EN- ALC-ZB-BK-DR Wireless Area Lighting Control Module [1 7]		❏ FS-PP-V2 FS-PP Fixture Integrated Sensor Power Pack [1 9]
INTEGRAT OCCOPANCY& DAYLIGHT SENSOR	N/A	❏ DFCSJ-OEM-OCC Clear Connect (RF) and Occupancy/ Daylight Sensing [2]	❏ SU-5E-IoT IoT Node Micro Sensor ❏ SU-5E-CL Connected Micro Sensor ❏ SU-5E-IL Indipendent Micro Sensor ❏ SU-5S-H(IoT/CL/IL) Serface Mount Sensor **(Must be Specified with CU-4E-FMH Control Unit)** [2]	❏ ZL00J -T0W Intellect Intelligent Fixture Control System [2]	❏ EN-CLM-PIR-DD-ZB SensiLUM™ Wireless Integrated Sensor	❏ SNS200 SNS200 for grouping [2]	❏ FD-301 Fixture integrated Daylight Dimming Sensor [2]
				❏ ZL00J-D0W Intellect Intelligent Fixture Control System [2]	❏ ZBHA-CLM-DIM-ENC Connected Lighting Module DIM [2]	❏ SNS300 SNS300 for networks [2]	❏ FS-205 Fixture integrated passive infrared occupancy sensor [2]
*WIRELESS OCCUPANCY SENSOR	❏ EOSCU-W-EO Occupancy Sensor - Ceiling Mounted [3]	❏ LRF2-OCR2B-P-WH Ceiling mount360° ,occupancy/vacancy sensor [3]	N/A	N/A	❏ EN-SCPPH-1500-ZB Wireless Passive Infrared Occupancy and Photo Sensors [3]	N/A	❏ LMDC-100 Dual technology PIR Ceiling Mount Occupancy Sensor [3]
*WIRELESS DAYLIGHT SENSOR	❏ ELLSU-W-EO Light Level Sensor - Ceiling Mounted [3]	❏ LRF2-DCRB-WH Ceiling-mount daylight sensor [3]	N/A	N/A	❏ EN-SCPPH-1500-ZB Wireless Passive Infrared Occupancy and Photo Sensors [3]	N/A	❏ LMLS-400 Single zone switching and dimming digital photosensor [3]
*WIRELESS OCCUPANCY & DAYLIGHT SENSOR	N/A	N/A	❏ SU-5E-IoT IoT Node Micro Sensor ❏ SU-5E-CL Connected Micro Sensor ❏ SU-5E-IL Indipendent Micro Sensor ❏ SU-5S-H(IoT/CL/IL) Serface Mount Sensor **(Must be specified with CU-4E-FMH Control Unit)** [3]	❏ ZL00J -T0W Intellect Intelligent Fixture Control System ❏ ZL00J-D0W Intellect Intelligent Fixture Control System **(Must be specified with ZL027-N0W and ZL00J-D0W Control unit)** [3]	❏ EN-CLM-PIR-DD-ZB SensiLUM™ Wireless Integrated Sensor ❏ ZBHA-CLM-DIM-ENC Connected Lighting Module DIM **(Must be specified with EN-WCM2-ZB-DR or EN- ALC-ZB-BK-DR Control Unit)** [3]	❏ SNS200-CMP SNS-200 for Grouping [3]	N/A
ACCESORIES	N/A	N/A	❏ TMC-SU-5E Tile Mount Carrier ❏ CBL-5E-CU4-30N 30 linch Sensor cable for CU-4 and IoT Ready ❏ CBL-5E-CU4-7F 7 Foot sensor cable for CU-4 and IoT Ready Driver	N/A	N/A	N/A	N/A
NOTES	N/A	4- Luminaire will be compatible with LUTRON LRF2-OCR2B-PWH Ceiling mount 360deg occupancy/ vacancy sensor & LRF2-DCRB-WH ceiling mount daylight sensor. Sensors must be orderd through Lutron	5- Luminaire will be compatible with ENLIGHTED SU-5E-IoT, SU-5E-CL, SU-5E-IL, SU-5SH, Sensors	6- Luminaire will be compatible with LEVITON I ntellect APP & Keypad room controller	7- Luminaire will be compatible with EN-SCPPH-1500-ZB Wireless passive infrared occupancy and photo sensor	8- Luminaire will be compatiable with philips field and wireless switch	9- Luminaire will be compatiable with DLM Room control system LMPB-100. . Sensors must be orderd through Legrand.

Due to the changes of constant improvement in LED technology, all details are subject to change without notice. Consult factory for up to date information.

Due to the changes of constant improvement in LED technology, all details are subject to change without notice. Consult factory for up to date information.